Capri schräg
Capri inclined

— Profil 50 x 50 mm
— Anschraubplatte 90 x 90 x 3 mm
— Glasmontage mit Glasklebeadapter

— Profile 50 x 50 mm
— Fixation plate 90 x 90 x 3 mm
— Glas assembly by glass glueing adaptor

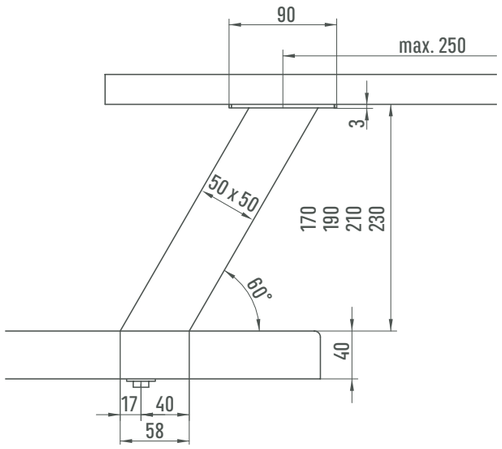

Capri schräg **Capri inclined**				
Ausführung Type	170 mm	190 mm	210 mm VA	230 mm Aluminium
Aluminium natur eloxiert Aluminium nature anodized	**20.007.11-170**	**20.007.11-190**		**20.007.11-230**
Edelstahl Stainless steel	**20.007.15-170**	**20.007.15-190**	**20.007.15-210**	
Aluminium edelstahlfarbig Aluminium stainless steel effect	**20.007.27-170**	**20.007.27-190**		**20.007.27-23**
Pulverbeschichtet schwarz matt Powder coated black mat structure	**20.007.13-170**	**20.007.13-190**		**20.007.13-230**

Glasklebeadapter Edelstahl 65 x 65 x 4 mm Glass glueing adaptor stainless steel 65 x 65 x 4 mm	**20.014.15**